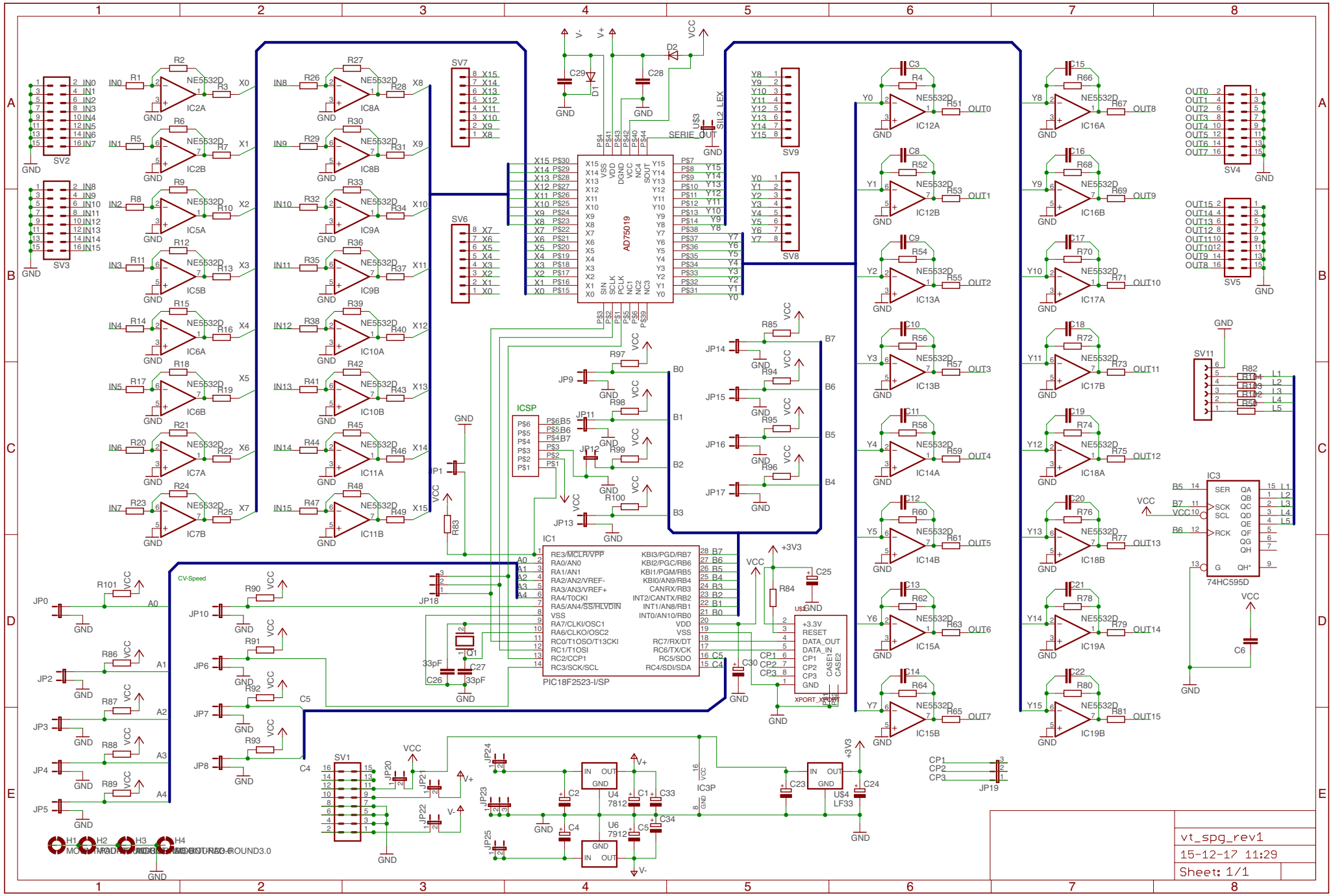

15-12-17 11:36 f=0.70 /Users/lexpro/Documents/DocVanMacLex/Eagle/PatchPanel/vt_spg_rev1.sch (Sheet: 1/1)